016 Series - 1M

VB-ALP016-R-1M

IP20

Vibe's Series of Aluminium Profiles use high quality 6063-T5 aircraft Aluminium and environmentally friendly PMMA (polymethyl methacrylate) or PC (polycarbonate) covers, providing an elegant appearance and excellent heat dissipation. Equipped with a PMMA Opal Diffuser the profile light range has a large variety of shapes and lengths to suit any lighting challenge. Extrusion only, required end caps, light strips and mounting clips sold separately under code VB-ALP-ACC & VBLST. VB-ALP-016 Has applicable max power:<28W/M

Features & Benefits

• Applicable Max Power: <28W P/M.
• Surface mounted extrusions are the perfect answer when the design doesn't allow or doesn't warrant a recessed profile & in many cases you will find a recessed profile has a surface mount "twin brother" in both size & shape.
• Suspended Extrusions look great over any kitchen bench, reception desk or bar top etc and make any retail shop display look stylish and modern.
• Prolong the life of your LED strip lights by dissipating the heat generated during operation
• Perfect for seamless continuous linear lighting
• Most (not all) are supplied in 1m, 2m & 3m lengths & can also be customised upon request.
• PC/PMMA Opal Diffuser • All available as standard Anodised Aluminium colour

* Some models/sizes available in Black & White
** Custom colour also available on request

VB-ALP016-R-1M

Specifications

SKU	VB-ALP016-R-1M
EAN	9340994407807
IP rating	20
Length	1000 mm
Height	30 mm
Mounting type	Corner Surface Mounted
Material	Aluminium
Accessories	2x End Caps, Metal Mounting Clip, 90 Joiner & 180 Joiner
Diffuser	Opal
Weatherproof	Non-weatherproof

Photometric information available upon request.
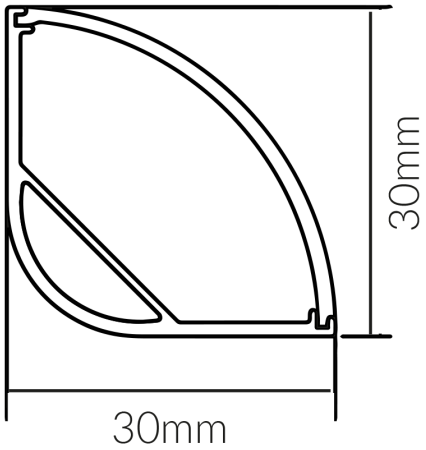
Dimensional Drawings