054 Series - 2M

VB-ALP054-2M

IP20

Specifications

SKU	VB-ALP054-2M
EAN	9340994407890
IP rating	20
Length	2000 mm
Width	35 mm
Height	40 mm
Mounting type	Suspended
Material	Aluminium
Diffuser	Opal

Photometric information available upon request.
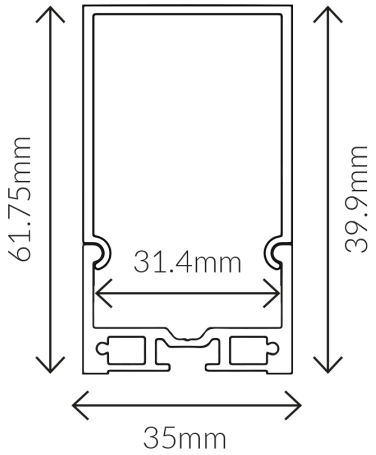
Dimensional Drawings