Vibe Eco 6W Warm White LED MR16 Lamp - Twin Pack

VBEL-MR16-TB-3K

VIBE’s Eco Range MR16's are designed in an attractive, convenient barcoded hangsell twin pack for display or just an economical way to purchase your lamps. Available in a Warm White or Cool White colour and in various bases to suit your application.

Features & Benefits

• Direct replacement for 35W MR16 Halogen Lamps
• Equipped with EPISTAR LED chips
• MR16 lamps are suitable with most electronic and iron core transformers
• Thermal plastic allows for good heat dissipation
• Environmentally friendly
• 25,000 hour lifespan
• 2 year warranty

Vibe Eco 6W Warm White LED MR16 Lamp - Twin Pack

VBEL-MR16-TB-3K

Specifications

SKU	VBEL-MR16-TB-3K
Luminaire efficacy	70 lm/W
EAN	9340994405551
Light Colour	Warm White
Wattage	6 W
Lumen output	420 lm
CRI	80
Beam Angle	60 Degrees
Base Type	GU5.3
Width	50 mm
Height	51 mm
Lifespan	25000 Hours
Warranty	2 Years
Dimmable	Non-Dimmable
LED source	Epistar
Lamp Type	LED
Input voltage	12 Volt
Working temperature	-20°C ~ 45°C
Kelvin	3000K

Photometric information available upon request.
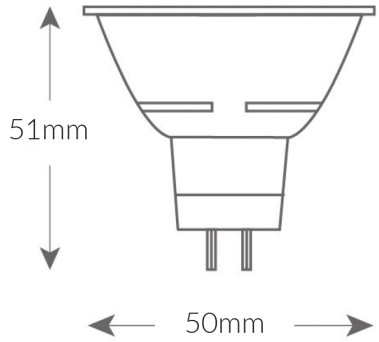
Dimensional Drawings