134F Series

VBLDL-134-1-F

IP20

Specifications

SKU	VBLDL-134-1-F
EAN	9340994017860
IP rating	20
Cut out	90 mm
Weatherproof	Indoor Use Only

Photometric information available upon request.
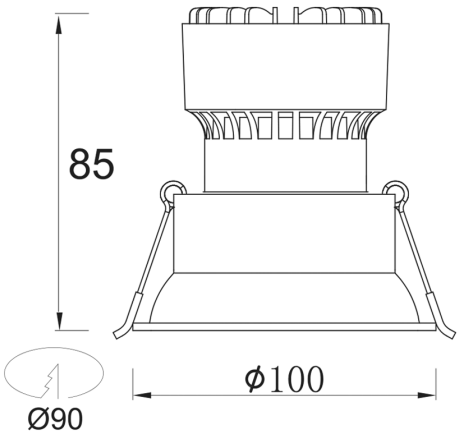
Dimensional Drawings