VIBE LIGHTING
quality · innovation · value

LED FLOODLIGHT 30W 3000LM IP65 IK08 1M F&P CCT (D)

VBLFL-30W-4-CCT

CCT

Change the colour of this 30W Black CCT Floodlight with the flick of a switch. Comes complete with 600mm cable for easy installation and a 2 year warranty for peace of mind.

Features & Benefits

• Change the Colour temperature with the flick of a switch - CCT can be switched by the slide button on the back of the fitting
• Advanced input under/over voltage protection for improved reliability
• Equipped with SMALITE high voltage LED chips
• Available in Black trim only
• Suitable for outdoors, warehouses, security lighting, residential areas, garages & farm lighting
• Comes complete with 600mm cable
• IP66 rated
• 30,000 hour lifespan
• 2 year warranty

LED FLOODLIGHT 30W 3000LM IP65 IK08 1M F&P CCT (D)

VBLFL-30W-4-CCT

Specifications

SKU	VBLFL-30W-4-CCT
Luminaire efficacy	100 lm/W
Light Colour	CCT
Wattage	30 W
Lumen output	3000 lm
IP rating	66
CRI	80
Beam Angle	110 Degrees
Trim colour	Black
Length	183 mm
Width	44 mm
Height	130 mm
Lifespan	30000 Hours
Warranty	2 Years
Mounting type	Surface
LED source	Smalite
Material	Aluminum & Glass
Lamp Type	LED
Input voltage	240 Volt AC 50HZ
Wiring method	Flex & Plug
Weatherproof	Weatherproof
Working temperature	-30 to 45 degrees
Box Qty	18

Photometric information available upon request.
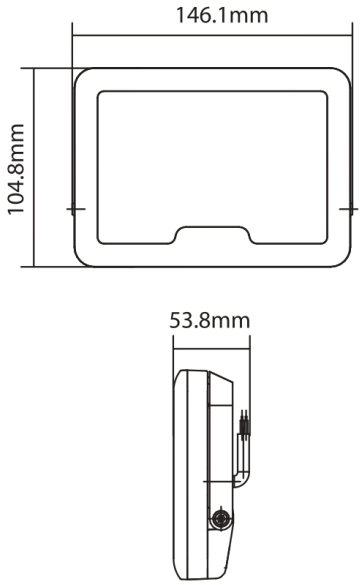
Dimensional Drawings