VIBE LIGHTING
quality · innovation · value

VBLG-ES-18W-PACCT

3CCT POWER ADJUSTABLE LED CORN LAMP

VIBE LED corn lamps are designed as a practical, energy-efficient solution for replacing traditional high-intensity discharge (HID) lamps in commercial and industrial settings. Their distinct corn-shaped structure features multiple LED chips, providing bright, uniform illumination ideal for large spaces such as warehouses, factories, workshops, and high-ceilinged buildings.

These LED Corn Lamps feature 3CCT and Power Adjustable settings for flexible lighting solutions. Designed for durability, they are weather and water-resistant with an IP64 rating.

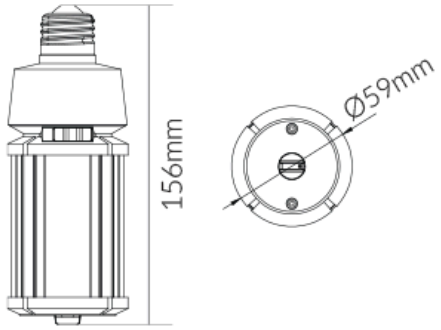

KEY FEATURES

- Power Adjustable – 18W/12W/9W
- 3CCT Switchable – 3000K/4000K/5000K
- Suitable for enclosed fixtures
- Capable of enduring voltage surges of up to 277V
- Energy-efficient and durable lighting fixtures designed to replace traditional high-intensity discharge (HID) lamps
- Optional dimming accessory for some models
- IP64 rated
- 50,000 hour lifespan
- 3 year warranty

SPECIFICATIONS

SKU	VBLG-ES-18W-PACCT
Power (W)	18/12/9
Efficacy (LM/W)	145
Lumens (LM)	2610 (@ 18W/4000K)
Colour Temp	3CCT
Kelvin	3000K/4000K/5000K
Dimmable	Non-Dimmable
CRI	80
Beam Angle	360
IP Rating	64
IK Rating	08
Base Type	E27
Weatherproof	Non-weatherproof
Diameter (MM)	59
Height (MM)	156
Width (MM)	59
Working Temp	-30°C ~ 60°C
Lifespan (HRS)	50000
Warranty (YRS)	3

APPLICATION

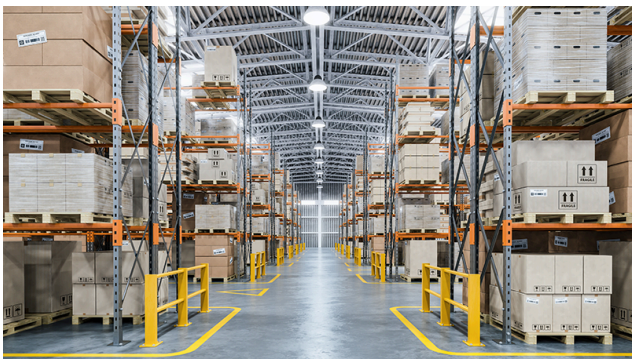

ADDITIONAL INFORMATION

Lumens based on 4000K at 18W.