VIBE LIGHTING
quality · innovation · value

VBLTL-0650-4-4K

50,000H | IP20 | Non-Dimm

Powerful 50W, 600mm, 4000K, Black, Three Circuit Track Lights comes with a 30x90° reflector and up to 30° tiltable wing . If you're looking for reliability these lights are perfect with instant on, zero flicker technology, boasting a 50,000 hour lifespan all backed by a 5 year warranty.

Features & Benefits

- Three Circuit LED Track Light allows independent switching
- Equipped with high efficiency SMD LED chips (Up to 130LM/W)
- CRI 90+ for better colour rendering
- Available in White or Black trim colour
- 30°x90° beam angle and 30° tiltable wing
- Instant on, no flickering
- 50,000 hour lifespan
- 5 years warranty

Specifications

SKU	VBLTL-0650-4-4K
Luminaire efficacy	130 lm/W
Track type	3 Circuit
EAN	9359682003160
Light Colour	Cool White
Wattage	50 W
Lumen output	6500 lm
IP rating	20
CRI	90
Beam Angle	30x90 Degrees
Trim colour	Black
Length	600 mm
Width	120 mm
Height	68 mm
Lifespan	50000 Hours
Warranty	5 Years
Dimmable	Non-Dimmable
Mounting type	Track
LED source	SMD
Lamp Type	LED
Input voltage	220V-240V AC 50HZ
Diffuser	Transparent
Weatherproof	Non-weatherproof
Working temperature	-25 - 50°C
Kelvin	4000

Photometric information available upon request.
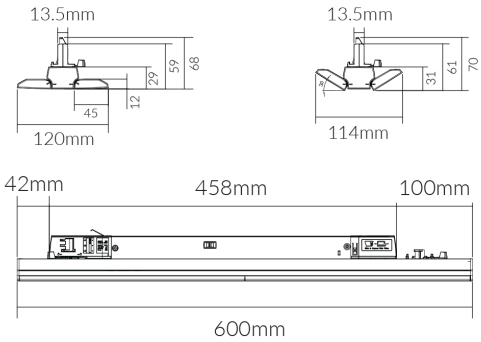
Dimensional Drawings