VIBE LIGHTING
quality · innovation · value

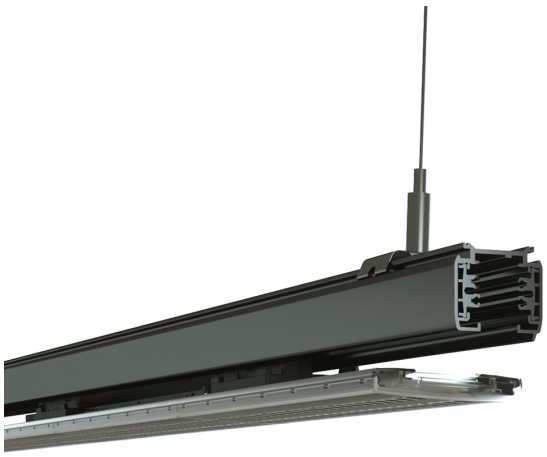

VBLTL-1241-1-PACCT

Flexible 28-40W power adjustable, 1200mm, 3000/4000/5700K selectable, White, Three Circuit Track Lights comes with a 90° reflector. If you're looking for reliability these lights are perfect with instant on, zero flicker technology, boasting a 50,000 hour lifespan all backed by a 5 year warranty.

Features & Benefits

• Three Circuit LED Track Light allows independent switching
• 28-40W power adjustable and 3000K/4000K/5700K Color temperature switchable
• Equipped with high efficiency SMD LED chips (Up to 130LM/W)
• CRI 90+ for better colour rendering
• Available in White or Black trim colour
• 90° beam angle
• Instant on, no flickering
• 50,000 hour lifespan
• 5 years warranty

Specifications

SKU	VBLTL-1241-1-PACCT
Luminaire efficacy	150 lm/W
Track type	3 Circuit
Light Colour	3CCT
Wattage	28-40 W
Lumen output	6000 lm
IP rating	20
CRI	90
Beam Angle	90 Degrees
Trim colour	White
Length	1195 mm
Width	60 mm
Height	54 mm
Lifespan	50000 Hours
Warranty	5 Years
Dimmable	Non-Dimmable
Mounting type	Track
LED source	SMD
Lamp Type	LED
Input voltage	220V-240V AC 50HZ
Diffuser	Transparent
Weatherproof	Non-weatherproof
Working temperature	-25 - 50°C
Kelvin	3000/4000/5700K
Power Adjustable	Yes

Photometric information available upon request.

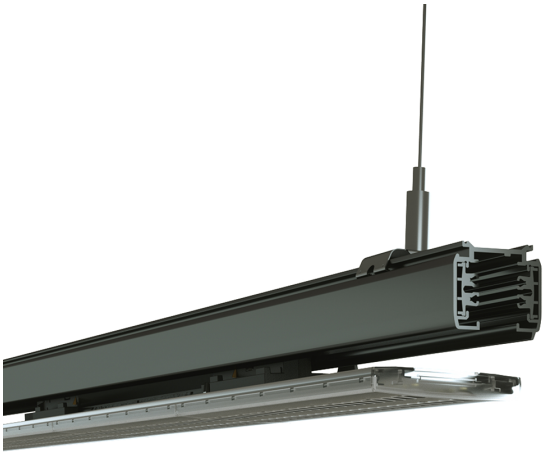
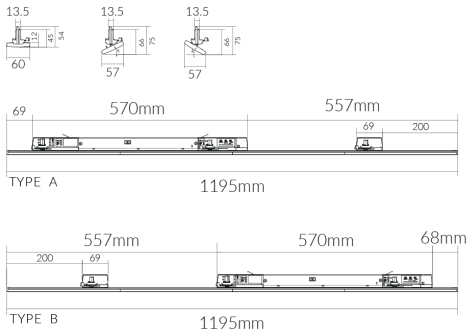
Dimensional Drawings