VIBE LIGHTING
quality · innovation · value

Elegant 200

VBLTL-200-1-GU10

Track lighting supplies a highly dynamic lighting option with individually adjustable spotlights along an adjustable railing system. A single track lighting system could simultaneously light several different objects located around the room making this system ideal for displays either retail or personal. Equipped with a GU10 Compatible lamp holder, a high strength shockproof steel body, instant start, 50,000 hour lifespan and a 3 year warranty.

Features & Benefits

- Wattage: 35W
- Body Colour: White
- GU10 Lamp holder. Use in conjunction with VBEL-GU10-TB-3K/5K
- Equipped with CITIZEN LED chips
- High strength Steel Housing
- 40° beam angle
- Also available in white body colour
- Built in driver
- Instant on, no flickering
- 50,000 hours lifespan
- 3 year warranty

Elegant 200

VBLTL-200-1-GU10

Specifications

SKU	VBLTL-200-1-GU10
Track type	Single Circuit
EAN	9340994407395
Light Colour	CCT
IP rating	20
CRI	80
Beam Angle	40 Degrees
Trim colour	White
Diameter	65 mm
Height	138 mm
Warranty	5 Years
Dimmable	Dimmable
Mounting type	Track
Material	High strength Steel housing
Dimming	Triac Dimming
Input voltage	220V-240V AC 50HZ
Weatherproof	Non-weatherproof
Working temperature	-20°C~50°C

Photometric information available upon request.
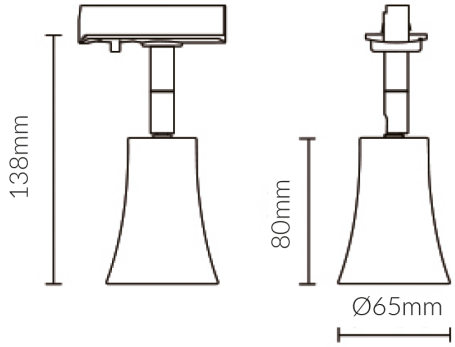
Dimensional Drawings